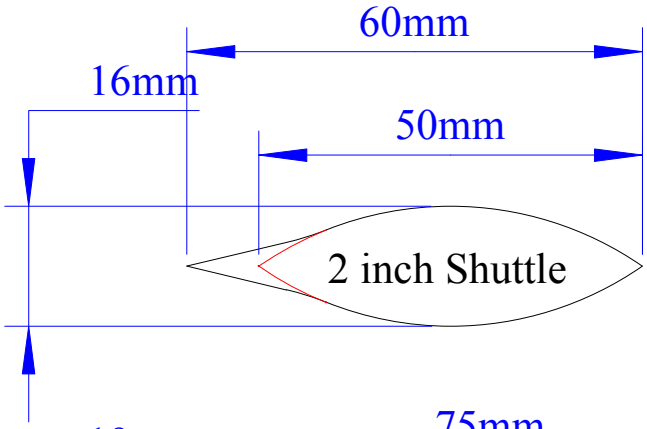
60mm
16mm
50mm
2 inch Shuttle

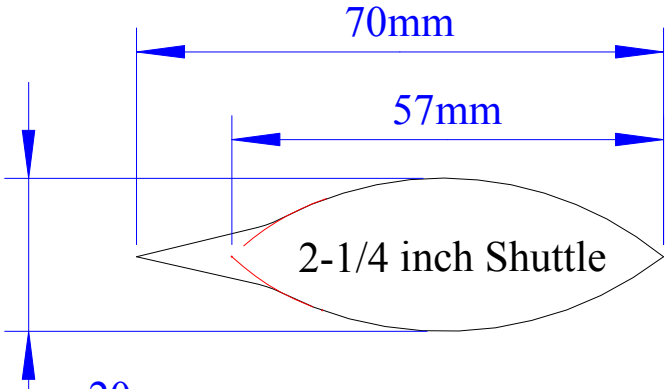
70mm
57mm
2-1/4 inch Shuttle
20mm

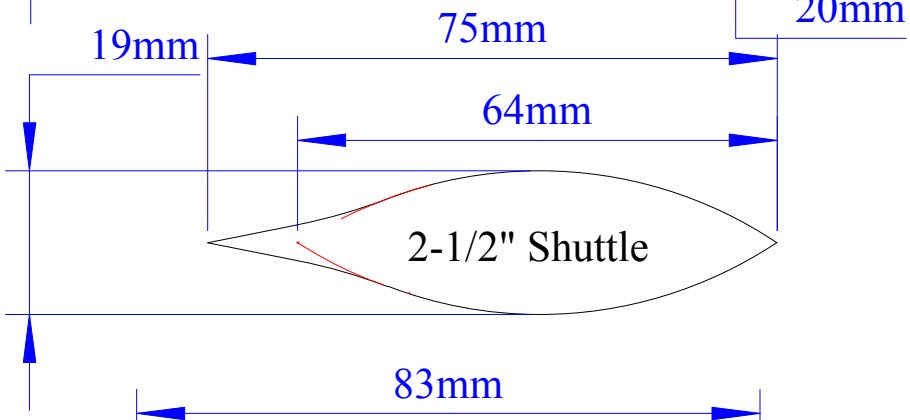
19mm
75mm
64mm
2-1/2" Shuttle

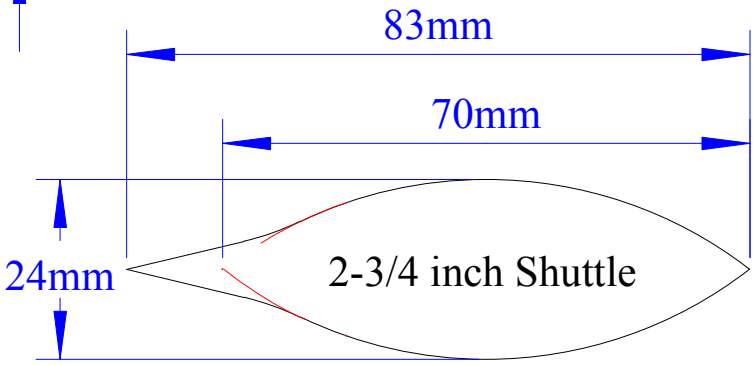
83mm
70mm
24mm
2-3/4 inch Shuttle

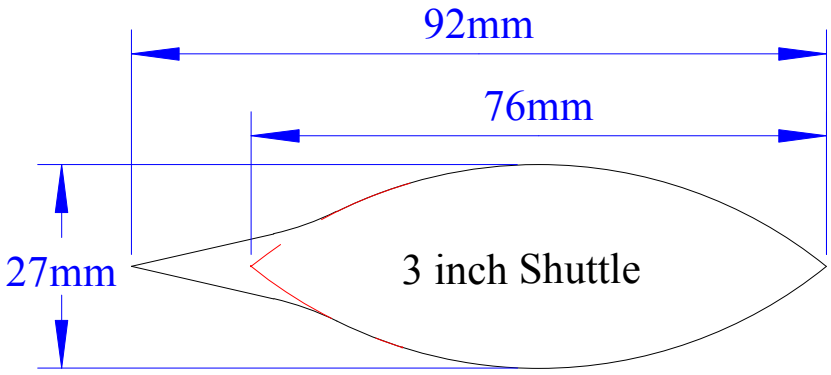
92mm
76mm
27mm
3 inch Shuttle

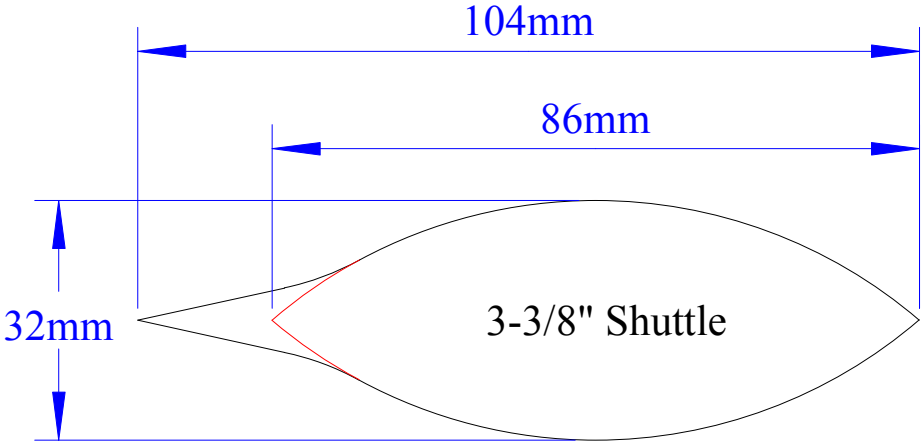
104mm
86mm
32mm
3-3/8" Shuttle